石家庄冠晶电子科技有限公司 GJ12864D

128 x 64 dots +white LED backlight

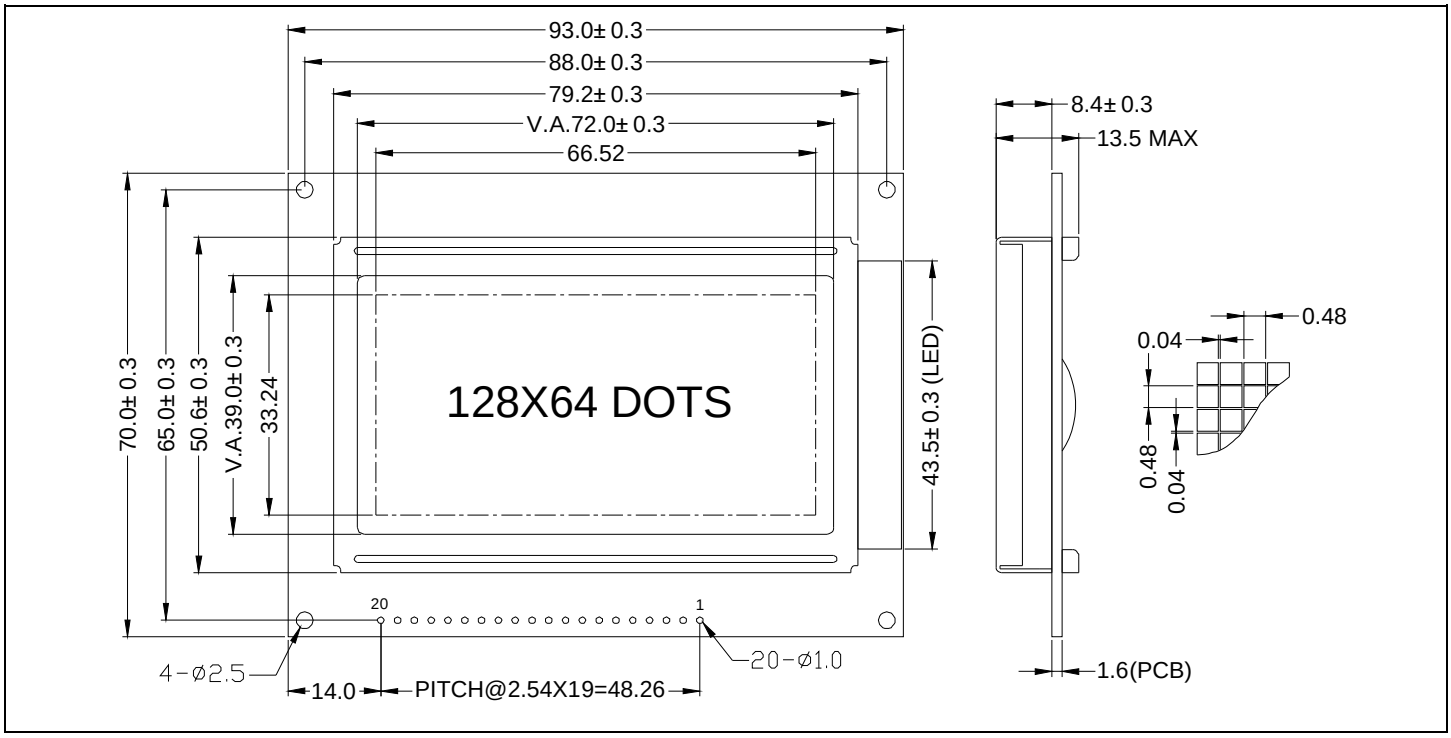

ABSOLUTE MAXIMUM RATINGS

Item	Symbol	Min.	Max.	Unit
Supply Voltage(Logic)	VDD-VSS	-0.3	5.5	V
Supply Voltage(LCD)	VDD-VO	-0.3	7.0	V
Input Voltage	VI	-0.3	VDD+0.3	V
Operating Temp.	Topr	-20	70	℃
Storage Temp.	Tstg	-30	80	℃

MECHANICAL DATA

Item	Nominal Dimensions	Unit
Module Size(W x H x T)	93.0 x 70.0 x 13.5	mm
Viewing Area(W x H)	72.0 x 39.0	mm
Dot Pitch(W x H)	0.52 x 0.52	mm
Dot Size(W x H)	0.48 x 0.48	mm
Weight	Approx. 80	g

ELECTRICAL CHARACTERITICS(VDD=5V±5%)

Item	Symbol	TEST Condition	Min.	Typ.	Max.	Unit
Input High Voltage	VIH	--	0.7VDD	5.0	VDD	V
Input Low Voltage	VIL	--	-0.3	--	0.6	V
Output High Voltage	VOH	IOH=-0.1mA	0.8VDD	--	VDD	V
Output Low Voltage	VOL	IOL=0.1mA	0	--	0.4	V
Supply Current	IDD	VDD=5.0v	--	3.0	5.0	mA
LCD Driving Voltage	VDD-VO	Ta=25℃	--	6.5	--	V

PIN CONNECTIONS

PIN	Symbol	Level	Function
1	VSS	0V	GND
2	VDD	+5V	Power supply for logic
3	VO	--	No connection
4	RS	H/L	H:Data L:Instruction code
5	R/W	H/L	H:Read L:Write
6	E	H,H→L	Enable signal
7	DB0	H/L	Data bus line
8	DB1	H/L	
9	DB2	H/L	
10	DB3	H/L	
11	DB4	H/L	
12	DB5	H/L	
13	DB6	H/L	
14	DB7	H/L	
15	PSB	H/L	H:Parallel mode L:Serial mode
16	NC	--	No connection
17	/RST	L	Reset signal,active "L"
18	VOUT	--	No connection
19	LED+	+5V	Power supply for LED backlight
20	LED-	0V	

BLOCK DIAGRAM

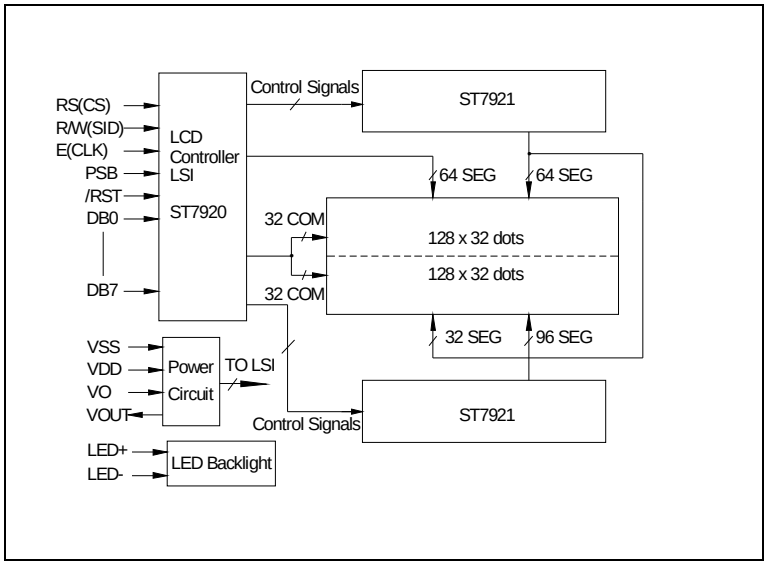

LED BACKLIGHT SPECIFICATIONS(Ta=25℃)

Item	Symbol	Typ.	Max.	Unit
Forward Voltage	Vf	3.1	3.3	V
Forward Current	If	60	--	mA
LED Color	white			

TEL:0311-85230818 FAX:0311-85230828